With Malcolm McBride
Airworthiness Engineer

IDENTIFY, EVALUATE, PRIORITISE & MITIGATE – A BALANCED APPROACH TO RISK MANAGEMENT

This month's cautionary tales for pilots, builders and maintainers

Welcome to the first *Safety Spot* of 2018. I'm not exactly sure how to judge 2017, it flashed by too quickly to get much of an impression. That's a good thing, I suppose – idle hands and all that! I hope that all's well with you and those close to you. We're all in pretty good form here at Turweston HQ, and primed to offer any support that you might need to achieve your aviation goals throughout the coming year.

Thanks to all of you who continue to make *Safety Spot* a useful contribution to flight safety – it'd be impossible to write it without your feedback reaching our desks. I believe that you can learn almost as much from listening to somebody else's 'near-miss' as you can from one's own 'close shaves'. All aviators understand that what we do carries danger – perhaps quite literally – above and beyond the norm, so flyers tend to put safety to the front of their minds in all that they do.

With that observation in mind, and thinking about a few rather too often occurring issues, this *Safety Spot* is going to look at a couple of basic gotchas which have affected LAA pilots through 2017. The first of these is the tricky subject of hand-starting an aircraft, and the second is tackling the need to ensure that pre-flight checks are carried out calmly and thoroughly by the pilot. The reason for the second reminder is that we've had another door coming off unexpectedly during the cruise – the pilot was sure he'd gone through the pre-flights properly but, well, we'll chat about that later.

However, before we get into these 'good airmanship' related tales, there's a brush-up on the latest situation when it comes to mogas use in our LAA machines.

MOGAS – THE RULES

Despite our best efforts, inevitably, last year there were a number of accidents and incidents involving LAA members. You'll probably know that most incidents which involve LAA types end up being investigated rather at arm's length, normally by correspondence between the Air Accident Investigation Branch (AAIB) and the pilot of the aircraft involved. To ensure the appropriate level of separation between the investigators and the parties actively involved, LAA Engineering considers it preferable for the AAIB to remain in charge of all enquiries connected with accidents involving aircraft operating under our Association's banner. Over the years, LAA Engineering has resisted invitations from the AAIB for our Association to carry out accident investigations directly.

Nevertheless, AAIB often comes to LAA Engineering for advice and, while preserving the essential distinction between the two bodies, we do have a close professional working relationship with its team, which is something we're quite proud of.

One point which has recently come to light during discussions with AAIB investigators who are looking into one or two of the more serious incidents, is that some of the aircraft involved were using mogas, and in particular, mogas which contained ethanol, although they didn't appear to be formally approved to do so. Therefore, once again, we're stressing the importance of the rules applying to the use of mogas in LAA aircraft, and the process required by members to gain approval for its use.

The prime message for all of those who hold responsibility for the management of

(Above) **The use of forecourt motor fuel (mogas) in aircraft remains a theme here at LAA HQ, after a number of recent accidents and incidents.**

Therefore, after discussions with the Air Accident Investigations Branch (AAIB) at Farnborough, we agreed to remind our Association's flyers that, before an aircraft can legally use mogas, it must be checked whether it's eligable to be approved under the LAA's processes, and an LAA Inspector must carry out specified inspections and complete mandatory paperwork.

The pictures above show the effect that water in fuel can have on components in a carburettor. In this case the water almost certainly entered the system because of the hygroscopic nature of ethanol. *(Photos: Nigel Graham)*

(Above) **We showed this picture of a failed fuel inlet pipe in the December 2017 edition of *Safety Spot* and, as you may recall, the failure of this pipe has prompted the issue of an *Airworthiness Information Leaflet*, requiring checks on all Europa aircraft.** *(Photo: Malcolm McBride)*

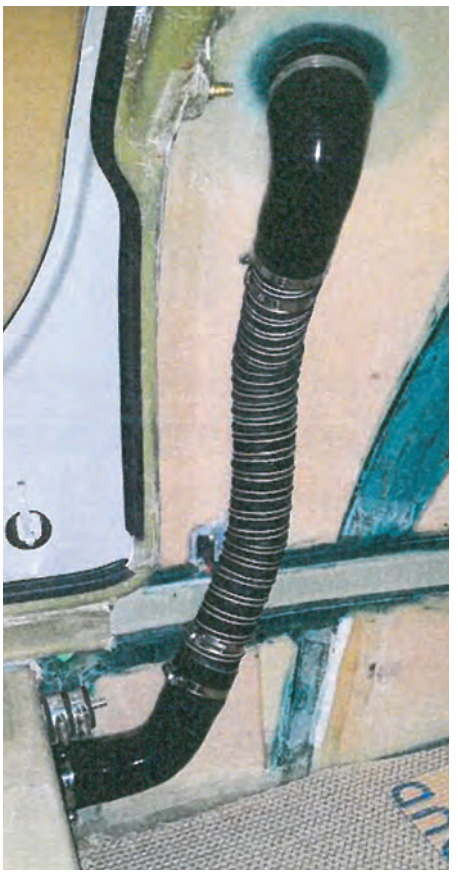

(Above) **LAA Inspectors may come across this fuel inlet pipe design, which is an authorised Europa modification (*MOD 79*).**

The reason that it had to be introduced was because the moulding company which supplied the formed plastic filler pipes, as shown in other photos, couldn't continue after the first batch.

Europa owners are reminded that the requirements to check the fuel inlet pipe applies to all types.
(Photo: Europa Aircraft)

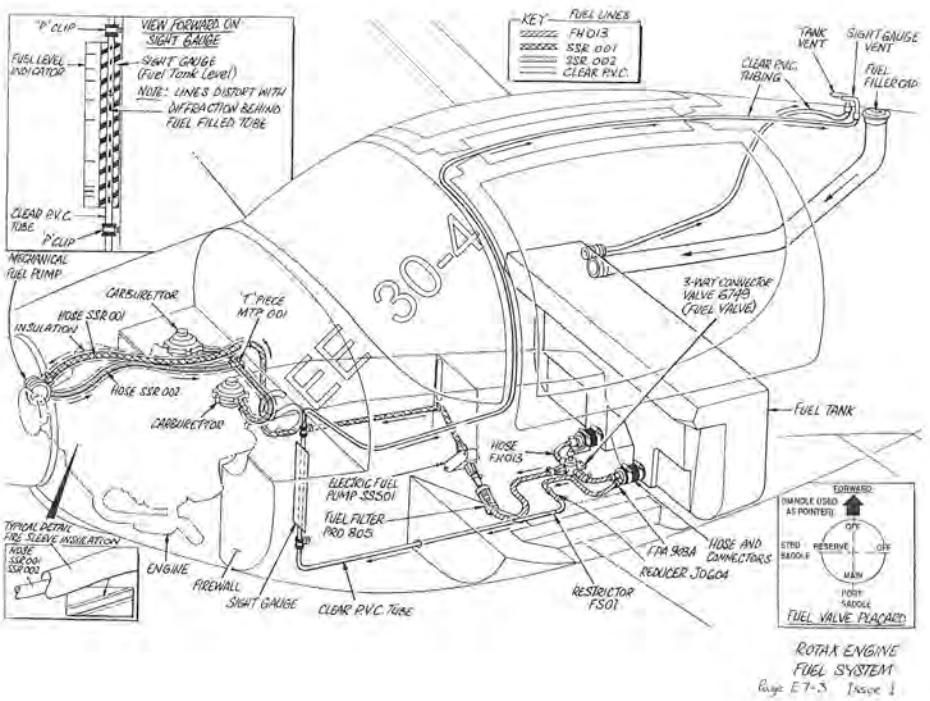

(Left) **This sketch of the fuel filler pipe's arrangement in an early Europa 'Classic' shows the original design, which uses a specially-made rubber hose. Some owners have changed this rubber pipe to a formed aluminium tube which, over time, has shown good service, though in one case the connecting rubber pipes were shown not to be fuel-proof.**

LAA Engineering has issued a *Standard Modification*, which facilitates this alternative, both to regularise this change and to offer a minimum standard for any components which are used.
(Photo: Europa Aircraft)

an aircraft – namely pilots, owners, and LAA Inspectors – is that mogas approval isn't automatic. There's a procedure to follow, to find out whether an individual aircraft satisfies the requirements for mogas to be utilised, and if so, to legalise its use in that machine. Don't take it for granted that because another example of the same type has been cleared, yours is too, even if it's physically identical. Unless the paperwork process has been followed, mogas can't legally be used on your machine.

Remember that an aircraft that was cleared for mogas use years ago was probably okayed under a different scheme, which doesn't cover using modern forecourt fuel, which almost certainly contains ethanol. It might be okay, but checks need to be made and the appropriate, up-to-date procedure followed. We've seen a lot of non-metallic parts badly affected by E5 mogas, which were okay on the old four-star and ethanol -free unleaded. Very few engine types have been cleared for use with E5 mogas.

If you do want to utilise mogas in your aircraft, then make sure it's actually cleared to use it. If you aren't sure, visit the 'Aircraft & Technical' section of the LAA website, look in 'Operating and Maintaining Aircraft' , and read the various *Technical Leaflets* on the subject. Note that LAA Engineering has tried very hard to ensure that, for appropriately-configured aircraft, the actual approval can be completed by LAA Inspectors in the field, and there are no 'hidden' fees! Also note that part of the approval procedure is that the specific inspection checklist needs both to be signed by your Inspector and then stapled into the aircraft's logbook.

(Above) **I just couldn't resist putting this fabulous picture of LAA Inspector, Alan Hartfield, flying the only remaining UK example of a Dart Kitten II – after all, only four examples of this 1936 ultralight design were built. This example received its authorisation to fly on 30 April 1937 and had a series of owners before being badly damaged in a crash at Willingale, Essex, in November 1964. It was subsequently rebuilt and, until 2012, was owned and very regularly flown by Alan.**

The aircraft is now owned by Robert Fleming and forms part of the collection at the Real Aeroplane Company at Breighton. The engine, a twin-cylinder JAP J99, doesn't have an electric starter so Alan knows a thing or two about hand-starting aeroplane engines and is well qualified to pass on advice on the subject. *(Photo: Alan Hartfield)*

(Above) **This picture shows LAA Inspector, Alan Hartfield, briefing his assistant, now Pilot Officer William Smith, on his role in the engine-starting process. Naturally, the 'gold standard' procedure when it comes to hand-starting involves two 'trained' people. Ideally, that's the pilot in the cockpit and the pilot/engineer as hand-swinger. However, as in this case, quite often pilots find themselves in positions where personnel choice is limited. A common misconception is that the pilot hands over the responsibility for starting the engine to the 'ground crew'. That may have been the case in the RFC, but these days the captain of the vessel remains in-charge at all times and is completely responsible for all aspects of the aircraft's starting.** *(Photo: Alan Hartfield)*

(Above) **This picture shows the other end of the Dart Kitten II before the engine was hand-started by Alan, with a trainee in the cockpit. This 'belt and braces' approach to safety is absolutely essential, as risks increase when getting assistance from inexperienced hands. There's always a danger that the throttle could be wrongly set or moved accidentally when entering or leaving a cockpit. Watch out if you're using screw-in stakes as tie-downs, as they aren't always as secure as they may seem.** *(Photo: Alan Hartfield)*

HAND-STARTING AIRCRAFT ENGINES

Thanks to all of you who wrote and called, in support of my previously expressed view that we've seen far too many aircraft damaged recently, when situational control was lost after hand-starting. Regular readers will remember the Tipsy Nipper and the Emeraude stories we featured in the December *Safety Spot*, and I think we'd all agree it's appalling that an aircraft should be lost in this way.

Chatting to the members who contacted me directly and to LAA colleagues, I've come to the definite view that owners should place less emphasis on pre-prescribed lists and more on the creation of a starting procedure specific to the actual aircraft involved and the circumstances on the particular day, including who's available to help.

After all, every aircraft is in some way unique, so I think it's wrong to invent a common start routine, and each situation carries its own set of risks, so it's essential they're first identified and then dealt with.

Many of us have grown up in aviation, working with aircraft which have never been fitted with any sort of mechanical starter. It's also true to say that, most of the time, and with suitable training, the starting process happens without any real fuss. There have always been dangers lurking in any aircraft engine start – even with a mechanical start, it would be a folly not to check carefully that the throttle is set correctly and there's nobody in the vicinity of the propeller before engaging the starter. Every engine start, especially with some of the older piston types, carries with it the danger of a fire. Remember, we nearly lost a Twister last year, after priming fuel caught fire and there was no extinguisher readily available to put out the, initially small, blaze.

Two very experienced LAA members, Nottinghamshire flyer Dave Smith and Halton man, LAA Inspector Alan Hartfield, both wrote explaining what they felt might be going wrong. Dave actually wrote in a similar vein some time ago and we didn't follow up his comments. He felt that we might be fighting shy of offering, to quote, "Any kind of advice on challenging subjects." Dave, in a way, makes a good observation, in that he – rightly, in my view – recognises the subject of hand-swinging as being challenging. However, I don't agree that the LAA shies away, at least as a policy, from difficult or controversial issues.

I chatted with Dave, asking if he'd mind if I featured some of the long list of suggestions he sent in, which rather expanded the 'fuel on, brakes on' checklist-like approach, but on condition that I'd offer a critique along the way. As an experienced BMAA Inspector and long-term aviator – one who has safety uppermost in his mind – he readily agreed.

Dave said, "Firstly, if there's any way to avoid hand swinging, avoid it."

What Dave means is that, if an aircraft is fitted with a mechanical starter, and there's a problem with it or the battery, it isn't normally sensible to try to start the engine by hand-swinging. Regular readers will remember that a Chipmunk was recently badly damaged when the aircraft ran off after hand-starting because of a flat battery. Fix the starter or charge the battery, rather than keeping the show on the road by hand-swinging it.

Engines which aren't intended to be hand-swung probably haven't got the prop fitted on the crankshaft at a suitable angle anyway, or ignition systems set up to function

safely at hand-swinging RPM, which would perhaps create a risk of 'kicking back', causing serious risk to life and limb. The prop itself may not have blades which make it suitable or safe to hand-swing, either.

"Secondly," Dave continued, "always have someone in the seat who's fully briefed, has his/her feet on the brakes, the stick held back and absolutely knows how the throttle and ignition switches work, and what to do if it all goes pear-shaped."

I completely agree that any assistant needs to be fully briefed about the specifics, but I'd add that it's never wise to have partly-trained or inexperienced individuals in any position of responsibility connected with an aircraft, especially something as potentially catastrophic as a run-away situation after start. Unlikely though that might be, in this type of situation, the risk to an untrained, probably 'spooked' person in the cockpit doesn't bear thinking about.

Dave suggests that, "The 'swinger' is in total charge, and both [the hand-swinger and the person in the cockpit] must know that. The only responsibility of the cockpit incumbent is to stop the engine if uncomfortable."

I get what Dave suggests here and it comes from, I think, some military training environments, where the ground-crew were especially trained for the purpose of managing complex engine starts.

In reality, the person in the cockpit is often the owner/pilot, who knows far more about the aircraft and its engine than the helper at the prop, and inevitably talks them through the process at every stage.

In actual fact, in common sense terms, as well as in law, the person who remains in charge of the aircraft during an engine start is the captain. The captain may delegate a task, but not the overall responsibility for it.

In his email, Dave also reminded us that chocks are essential, explaining he never trusts the handbrake. In terms of risk management, though, I think the real point here is that the person in charge of the engine start shouldn't place absolute trust in any one element, be it the brakes, the chocks, mag switches, throttle or whatever.

An aeroplane with a spinning propeller is potentially a lethal weapon so there should always be a back-up safety plan for any one thing failing to work. Never rely on brakes alone or only on the fact that the throttle is set at idle to ensure the aircraft won't run away, as it might creep open by itself or, however unlikely it might seem, countless accidents have shown that one day you may forget to set it properly.

I expect that you've seen the lovely pictures of the Dart Kitten II, once owned and operated by Alan Hartfield. I really liked Alan's 'belt and braces' approach to engine starting. Although he was happy to go through a training routine with his young friend, he made sure that the aircraft was secured before actually starting the engine.

Recent runaway events have demonstrated that, even with the best of care and attention, things can go wrong. Perhaps this is a truism with all aspects of aviation, not just engine-starting. It must be remembered that a 'one size fits all' (thumbs-up) approach rarely offers the best safety outcomes –what works with one aircraft or engine probably won't with another type. After all, that's why we have a requirement for type training and engine management.

A good example of this was the runaway Tipsy Nipper, which involved a chap who pretty much did everything right during the start-up, but accidentally caught the throttle control with some loose clothing while stowing the chocks into the airframe.

Getting in and out of a cockpit creates risk, and getting an assistant to 'sit in' means that it's doubled, or perhaps more, if the assistant isn't familiar with the aeroplane, practised in egress, and suitably dressed. Not for nothing do flying suits have tight cuffs and velcro'd down pocket flaps!

So, is there an LAA-approved hand-swinging checklist? The above brief discussion should answer this question. Let's work together to make engine starting accidents a thing of the past.

Take a close look at your engine start-up procedure next time you fly, conduct a risk assessment, add up what might happen if things don't go completely to plan, in terms of danger and cost, and you'll probably come to conclusion that the extra care is worth the effort.

SLING – CANOPY LOSS

If you've looked through the pictures and read the attendant captions, you'll have noticed my comments about the unusual way events seem to tie themselves together, I alluded to 'the holes in the cheese lining up', a common enough phrase used when dissecting and identifying the multitude of separate components and events which lead to accidents.

If you haven't, take a gander at the picture showing the nicely-designed fuel filler pipe – look to the side of it and you'll see a little microswitch. When I first spotted that I realised immediately what it was for. Over the years, there have been several instances of Europas which have lost one of their gull-wing doors in flight, and it was concluded that the pilot hadn't latched it properly, allowing it to swing open and be wrenched off in the airflow.

The microswitches are wired into a simple circuit which illuminates a light on the instrument panel if the door latch pins aren't fully home in their sockets. The owner of the aircraft in the picture pointed out, when I called to congratulate him for the design of this little safety feature, that even though there's a warning light, he still completes a physical check of the door to ensure it's fully secure before taking off. It's a bit awkward to do this in the Europa, as the rear catch, which, because of the way the door flexes, is the one with a history of the shoot-bolt missing its target socket, sits behind the crew's shoulders and can be difficult to see – extra effort is required!

Perhaps to emphasise the point that a pilot shouldn't automatically blame the designer when something goes wrong, we've recently suffered another in-flight gull-wing door detachment, and this time the catch is of a completely different design and can easily be seen. Here's a few words describing what happened, taken from the AAIB's 'Red Top' report into the incident.

"The aircraft's owner, who was piloting the aircraft, and a passenger who was also a pilot, were flying from Lydd Airport to Shoreham Airport. The pilot was in the front left seat and the passenger was seated next to him.

About thirty minutes into the flight, at an altitude of 2,200ft and airspeed of about 116kt, there was a sudden increase in wind noise in the cockpit, accompanied by the passenger feeling a 'blast of air on his face'.

"The passenger then noticed that the right canopy door had opened about 5cm at its upper-forward corner, with the gap tapering back to the rear of the canopy. ›

(Above) **This picture links two distinctly separate issues discussed in this month's *Safety Spot*, quite by accident! The first issue relates to the changes some owners have made to the fuel filler pipes on their Europa aircraft. In this rather neat example, the rubber fuel pipe has been replaced by a preformed aluminium version – this particular one was sourced in New Zealand. One or two LAA members have done this and because this is such a neat solution, LAA Engineering is planning to issue a *Standard Modification* in the near future.**

The second issue, well, have you spotted the microswitch attached to the door frame, which fires off a light on the instrument panel when the canopy is open? I did and thought, "What a cracking idea." *(Photo: LAA Library)*

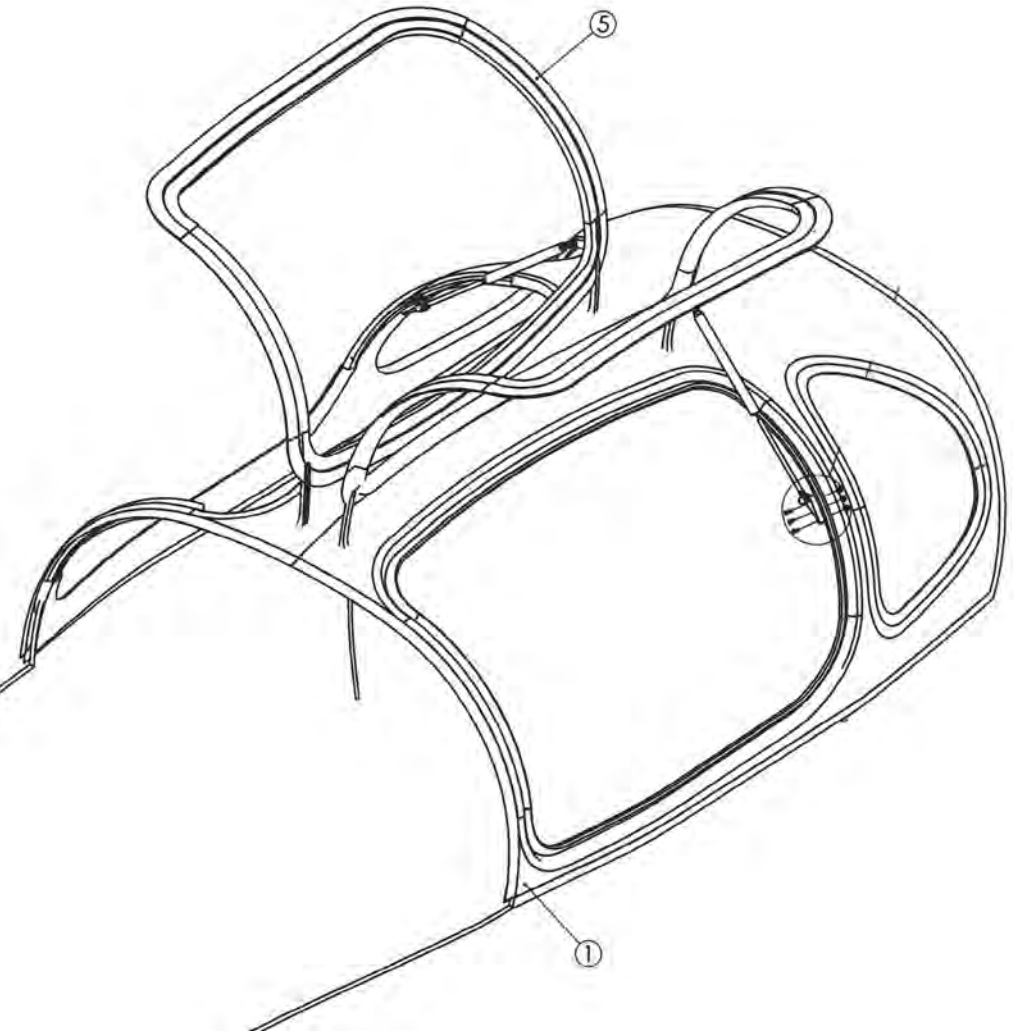

(Above & below) **It isn't always a bad thing 'when the holes in the cheese line up'. The sketch above shows the general arrangement of the gull-wing doors on the Sling, which are very similar, in general arrangement terms, to those of the Europa.**

Not wishing to be too Europa-centric, readers will remember that we've had a number of door losses due to them not being closed and latched correctly before take-off. Well, a similar thing has happened to a Sling aircraft so it's worth pressing the point that, regardless of latch design, it's essential for the pilot to physically check that the doors are closed and securely latched before take-off. *(Photos: The Airplane Factory)*

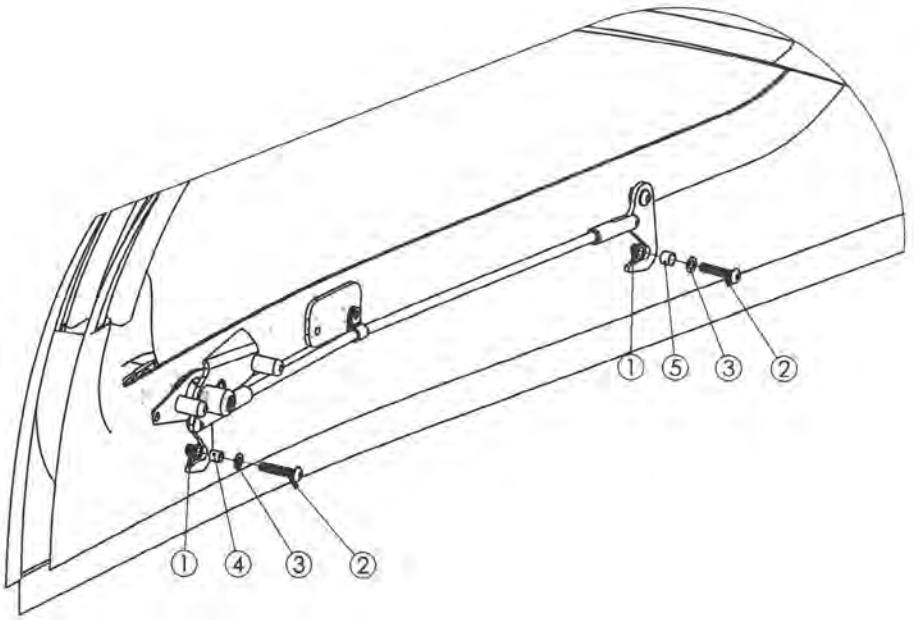

"After about fifteen-to-twenty seconds, there was a loud bang and the canopy departed the aircraft. The pilot informed ATC at Shoreham, where the aircraft subsequently landed without further incident. The local Police were also notified.

"The canopy door hasn't been located to date and no injuries to persons or damage to property on the ground have been reported."

After discussions with the pilot, who was initially sure he'd checked that the door was completely secure before departure, we concluded it was likely that, although the door had been fully shut during the pre-flight check, the catch itself may not have gone completely home. It's another reminder, if one were needed, of the need to ensure that pre-flight checks are carried out calmly and thoroughly by the pilot before committing to aviation.

Okay, please don't forget my earlier observation that it's your contributions which make *Safety Spot* work. I hope it doesn't sound too much like I'm blowing our own trumpet when I say that, between us, we make a pretty good team so please keep your stories coming.

To end, and speaking on behalf of the whole team here at LAA Engineering HQ, may we wish you, and those you love, the very best of good fortune for the coming year and, naturally, fair winds. ■

(Above) **These two pictures show the details of the remaining parts of the broken door hinges on Lucien d'Sa's Sling, and offer a timeline for the probable sequence of events.**

We think the front hinge (top photo) broke as the unlatched door slammed open, and was sucked upwards by the low-pressure area over the canopy. Held only by its rear corner, the door then flipped backwards in the slipstream, wrenching out the rear hinge bolt as it went (bottom photo). *(Photos: Lucien d'Sa)*

(Left & below) **When we first saw the pictures of the broken hinge we wondered whether the component itself mightn't have been made correctly. Originally, we presumed that the hinges themselves were individually laid up in moulds but, as you can see from the pictures, that isn't the case. For quality and manufacturing expediency reasons, the hinges are cut from a thick laminate composite material, which is especially laid-up for the purpose.** *(Photos: The Airplane Factory)*

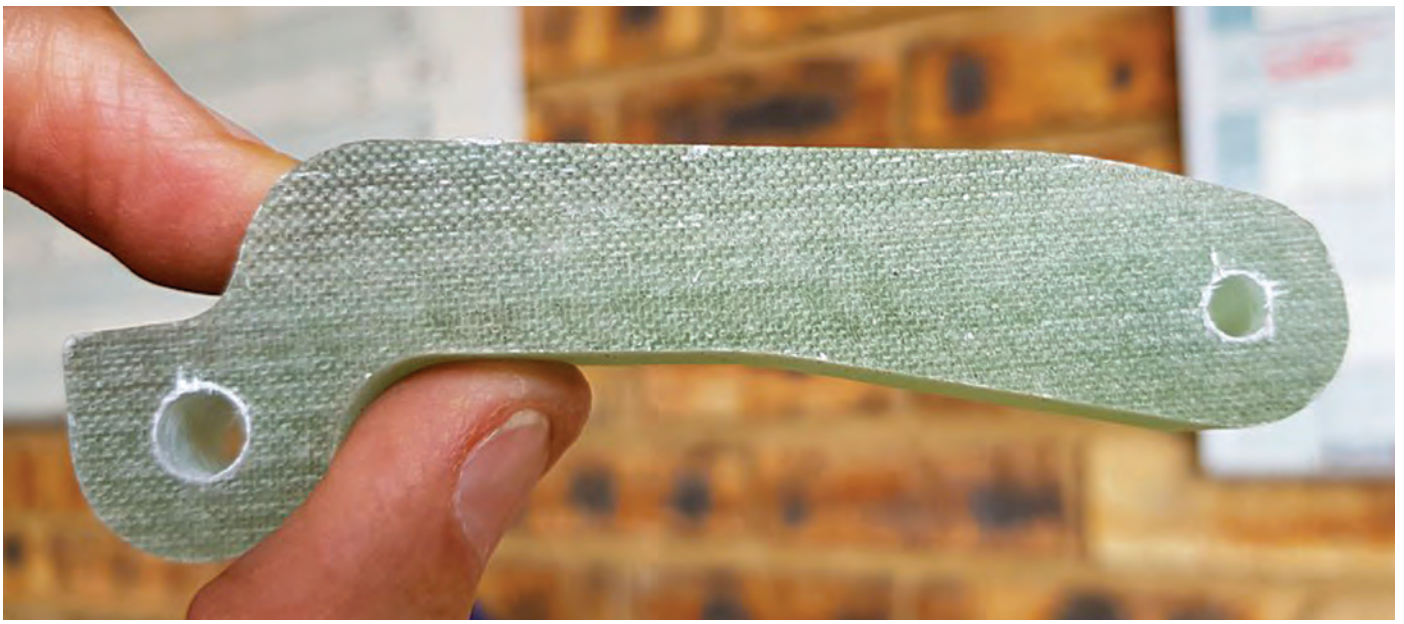

LAA ENGINEERING CHARGES – PLEASE NOTE, NEW FEES HAVE APPLIED SINCE 1 APRIL 2015

LAA Project Registration	
Kit Built Aircraft	£300
Plans Built Aircraft	£50
Issue of a Permit to Test Fly	
Non-LAA approved design only	£40
Initial Permit issue	
Up to 450kg	£450
451-999kg	£550
1,000kg and above	£650
Permit renewal (can now be paid online via LAA Shop)	
Up to 450kg	**£155**
451-999kg	**£200**
1.000kg and above	**£230**
Modification application	
Prototype modification	minimum £60
Repeat modification	minimum £30
Transfer	
(from CofA to Permit or CAA Permit to LAA Permit)	
Up to 450kg	£150
451-999kg	£250
1,000kg and above	£350
Four-seat aircraft	
Manufacturer's/agent's type acceptance fee	£2,000
Project registration royalty	£50
Category change	
Group A to microlight	£135
Microlight to Group A	£135
Change of G-Registration fee	
Issue of Permit Documents following G-Reg change	£45
Replacement Documents	
Lost, stolen etc (fee is per document)	£20

Latest SPARS - No.16 February 2015