The latest LAA Engineering topics and investigations. By **Malcolm McBride**

Safety Spot

Malcolm McBride considers issues concerning Jodel DR100 series seat frame fracture problems and Alpi pioneer primary control attachment points

Welcome to this Yuletide edition of *Safety Spot* – where did 2019 go? I hope 'you and yours' are in good form and, if you partake in such things, you're looking forward to many of the Christmas celebrations that are happening in your area. As is usual, I write this article sitting in my office here at the LAA's splendid HQ at Turweston aerodrome. Unusually for the last week or so, it's a rather lovely day, CAVOK with a light westerly breeze. I might just take the opportunity of trying out my new headset which arrived just this morning… let's see how I get on with this *Safety Spot*!

Actually, I know that we've been lucky with the weather thus far, our base is just south of the recent heavy band of rain. Naturally, we're a national organisation and we therefore appreciate that many of you reading this won't have managed to escape the flooding, caused by the seemingly endless supply of water these last couple of weeks. The culprit, or perhaps culprits has been a conspiracy of pressure systems both south and west of us, among other, closer to home, reasons. Our thoughts are with you as you clear up the mess – I hope, if you've been affected, that by the time you're reading this you don't have to tuck into the turkey wearing Wellington boots.

December brings our year to a close, so it's naturally a time of reflection. At years-end we'll be reviewing the incident/accident file in detail, but a quick fly-past, so to speak, shows that by a considerable margin Loss of Control incidents while taking-off or landing predominate. But well done to you and your respective engineering teams for keeping the engineering-related accidents and incident numbers in the minority as usual, but as ever we strive to learn from every accident and where possible, do what we can to prevent a needless repeat.

Still in 'reflection' mode, you'll see if you take the time to browse the Engineering section of our website, that we've issued quite a few LAA ALERTS – to date 22. This is just about double the previous year's ALERT outputs, but this increase in numbers doesn't suggest that we're having more and more technical issues among our fleet. The reality is just the opposite in fact, but since 2017 we've used the ALERT system as a device to widen the access to individual issues affecting members' aircraft.

Of course, if an issue affects a group of aircraft, we still write to owners alerting them directly that there's a potential gotcha they may need to deal with, but the ALERT system means that all LAA Inspectors can be part of the story quickly – the Chief Inspector, Ken Craigie, is tasked to send a link to the ALERT within a couple of days of the ALERT's publication date. This is a very effective way of widening the specific aircraft type's knowledge base and generates quite a bit of feedback from expert LAA Inspectors.

Perhaps there's a gene which drives every generation towards reinventing itself, I must confess that I've not really any good at communicating by thumb… but my grandchildren are! That said, by their very nature, rules are generally made because of events in the past; so, in this brave new world of instant communication, let's not forget that many of the aircraft we fly come from a different age, and the problems found by engineers in that past will probably return to bug us in this future. The feature on the Jodel below, and perhaps those that follow, are good cases in point.

Jodel DR-100 (Series) – Front Seat Failure

I remember, when I was upgrading my British Gliding Association 'Silver C' certificate to a UK PPL, a good route for the relatively impoverished 'keeny' through to a pilot's licence in those days, I transferred from aircraft that had no seat adjustment whatsoever, barring of course, cushions, to a (then) brand new PA-28 140. This gleaming machine appeared rather space-age I seem to remember, but then it still rather does to my eye, it's a fabulous design when you dig into it.

But I digress. The point is that this was the first aircraft I'd come

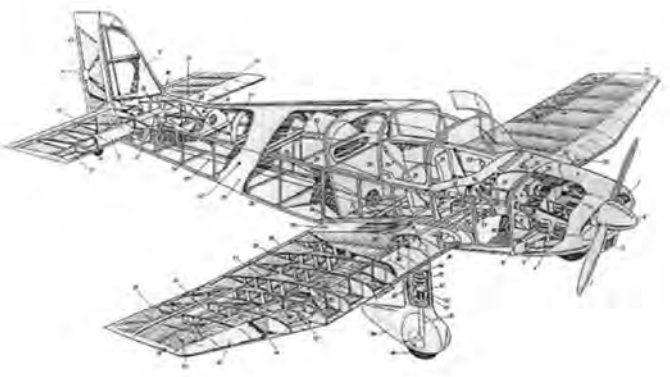

Above I couldn't resist sharing his beautiful cut-away drawing. As you can see, it shows a Jodel DR 1050-M 2+2. You will notice that all three/four seat Jodel aircraft (DR-100 series) aircraft have adjustable front seats and, over the years, cracking has been seen in the tubular structure. **Credit: Frank Rogers**

Left and above Les Bent, technical lead of the eight man 'Prestwick Tailwheel Group' sent us a very thorough technical report into a recent failure of the pilot's seat on their aircraft. The pictures have been taken from this report. This aircraft was purchased by the group in 2018, though it has been operating under an LAA administered Permit to Fly since 2008 when it joined our Jodel fleet after operating under a French C of A.

Jodel DR-100 series aircraft owners will know that there is a repetitive annual inspection requirement on these front seat frames and, though the Prestwick team accept that the crack was probably there at the last inspection point some 96 flying hours ago, it wasn't spotted. The picture on the left shows where the seat back has parted completely from the base, a close look in the failure area shows that, as has been seen in the past, the cracking starts from the hole where the seat-base strap's attaching hook enters the base-frame. The picture shows the fracture face – as you may be able to see, there's clear evidence that, once it had started, it has progressed steadily to failure over time. **Photos: Les Bent et al.**

Below and right The pictures below emphasise the need for inspecting engineers to widen their problem-search area when completing an AD specified inspection. Right shows the re-formatted Bureau Veritas (BV) AD, issued by the French authorities in July 1966, which shows clearly, though initially as a sketch, where to look for cracking during the annual inspection. Whilst taking a picture of a DR-1050 seat, so that I could update the original BV, I noticed that, though the inspection of this seat had been recently carried out, the seat was starting to fail an inch or two away from the usual cracking point (top right). The bottom picture shows the crack forming alongside the heat affected zone at the lap-strap attachment point. **Photo: Malcolm McBride**

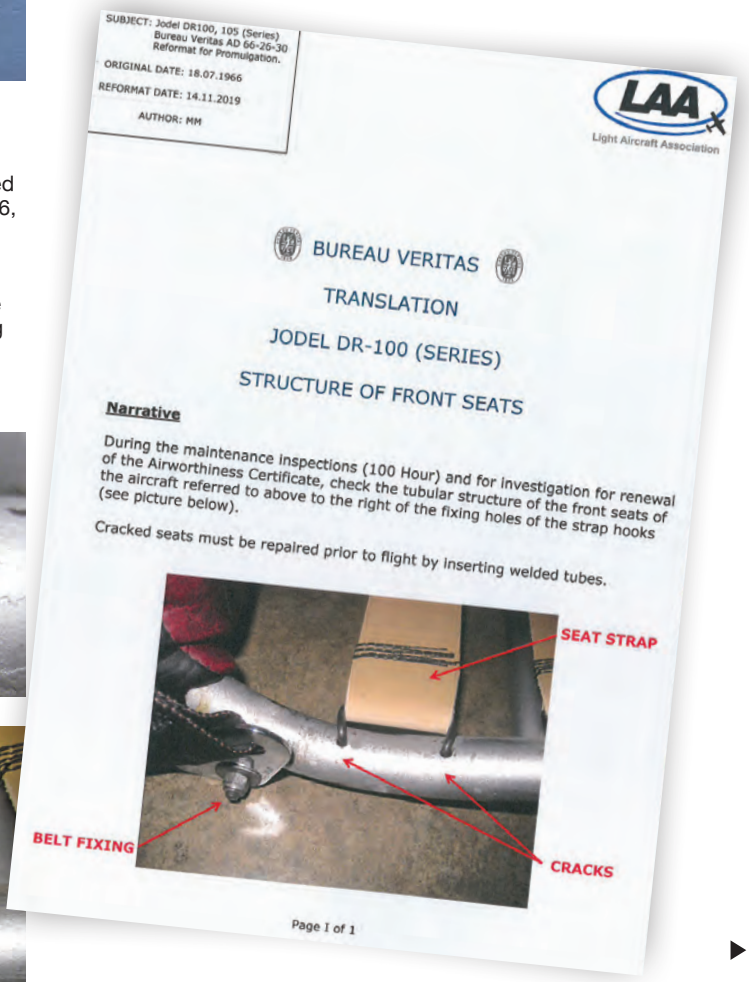

SUBJECT: Jodel DR100, 105 (Series)
Bureau Veritas AD 66-26-30
Reformat for Promulgation.

ORIGINAL DATE: 18.07.1966

REFORMAT DATE: 14.11.2019

AUTHOR: MM

LAA
Light Aircraft Association

BUREAU VERITAS

TRANSLATION

JODEL DR-100 (SERIES)

STRUCTURE OF FRONT SEATS

Narrative

During the maintenance inspections (100 Hour) and for investigation for renewal of the Airworthiness Certificate, check the tubular structure of the front seats of the aircraft referred to above to the right of the fixing holes of the strap hooks (see picture below).

Cracked seats must be repaired prior to flight by inserting welded tubes.

SEAT STRAP

BELT FIXING

CRACKS

Page 1 of 1

across that had adjustable front seats. I can remember getting told-off regularly by the flying instructor for not checking that the seat was properly adjusted and fully latched before taxying out. "*Have you any idea what would happen if the seat 'let go' during your climb-out, I'm sure it wouldn't be pretty, and your mum would have something to say about it.*"

Since those days I have seen a number of accident reports, some involving fatalities, where a failure of the pilot's seat sits centre-stage, so it was good advice.

We received an excellent report written by Les Bent, who acts as the Technical Lead for a fairly new eight-person Jodel group. I know that a number of this group are professional aeronautical engineers in their own right which, no doubt, makes Les' job easier in some ways, but perhaps harder in others!

The report details a partial failure of the pilot's seat on their aircraft; you can see from the fracture face picture taken by a group member, that the failure has been progressive and probably occurred over a substantial period of time. In this case it looks like the start of the crack was in a known weak point, where the tubular base-frame has been drilled to accept a hook. This hook holds the flexible webbing that forms seat's base, in place and when you think about it, this area of the seat is quite highly stressed. Firstly, that hook has to take a good portion of the pilot's weight, which is changing all the time as the aircraft bounces around in turbulence. Then, secondly, the hole acts as a stress concentrator as the forces through the tube have to negotiate the space. Then there's the position of this particular attachment, so thirdly, it has to resist a fair amount of bending force imparted via the seat back.

It's this third issue that I think causes the most trouble, and not necessarily because of flight loads. When you get into the aircraft, you probably lean on the seat back as you feed your feet into their respective places in the airframe, applying quite a force on that lower bend. Then there's the act of seat adjustment itself – LAA Inspector Nick Sibley, one of the professional aeronautical engineers in this group, suggests that the pivoted seat has been 'a bit stiff' for a while, no doubt the extra force needed to overcome the friction hasn't helped.

In the 1960s, the French authorities, no doubt after receiving reports of seat frame cracking on Jodel aircraft, introduced a 100-hour repetitive inspection (or annually, whichever occurs first), mandated by a Bureau Veritas Airworthiness Directive (BV AD 66-26-30). After receiving this failure report, we decided initially that we should remind Jodel owners of the existence (and importance) of this AD, and we thought it appropriate to clarify the rather scrappy AD, which included a rather amateurish sketch of the crack site on a Jodel seat.

We found a 1050 that we could use, and I set about the photographic exercise. The owner assured us that the seat had very recently been inspected against AD 66-26-30, and that the seat frame was in good order. He was very happy to use his seat as a model. When we peeled back the seat fabric to take the picture, sure enough, there was no cracking emanating from the said hole. Then I looked around a bit and found that, just a few inches away, the frame was cracked.

Of course, this means that we'll have to back up the AD with further clarification of the original crack location from way back when, and issue an Airworthiness Information Leaflet (AIL) getting owners to expand their inspection to cover the whole area of this bottom bend as affected in the crack. Incidentally, we noted that this newly discovered crack has a similar triple whammy route cause; as well as the problem of the forces in the bend, this point also attached the lap-strap, so there's the added forces applied as a pilot yanks him or herself closer to the rudder pedals before they set off.

Then, to cap it all, the seat belt is connected to a welded fitting, which will affect the material structure surrounding the weld – engineers call this area the heat-affected zone. This newly found crack runs alongside the weld, perhaps confirming the relevance of this last issue.

Thanks to Les and the team up there in Scotland, I hope that the repairs to the seat frame are progressing well. I might say that we were all impressed that this group of flyers are tackling the management problems associated with a group-owned aircraft head on. I love the phrase 'Technical Lead', brilliant, keep it up.

Alpi Pioneer Aircraft (All Marks) Security of Primary Control Attachment Points
G-LLOY Elevator Stop / Pioneer Centre Elevator Hinge

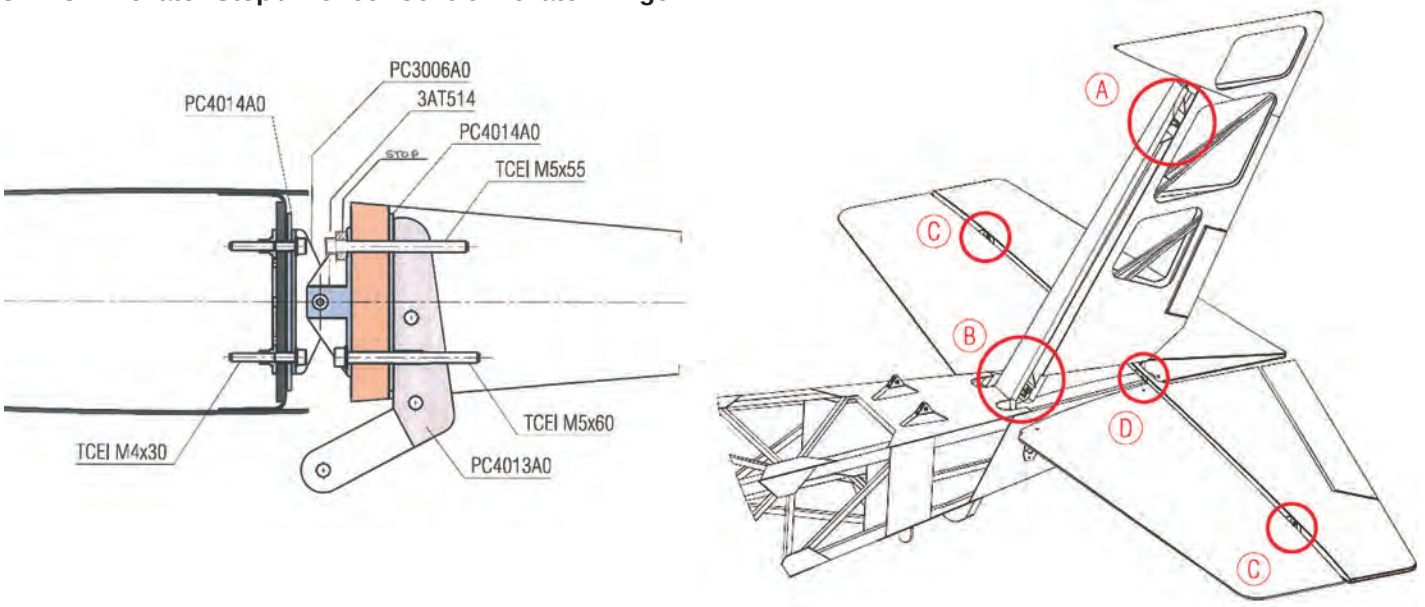

Above Earlier this year the pilot of an Alpi Pioneer 300 found himself being confronted by an inflight control restriction affecting the elevator; initially he noticed that, during the landing, he wasn't able to properly flare – after a successful go-around he realised that the elevator had limited up movement. Scary enough but it also seemed like his nose-up authority appeared to be actually reducing. After a 'rather fast' landing on the long runway at Tatenhill he investigated the cause, which was found to be a loosening hinge attachment bolt, so began an enquiry into how a primary flight control could fail in this potentially fatal way. The sketch on the right shows the attaching hinge point on the Alpi Pioneer's empennage, the sketch on the left shows the cross-sectional detail of the centre elevator hinge. Note that the elevator range limiting stop consists of a bush fitted over the top elevator hinge attachment; the bush's length is adjusted to vary the length of the attachment bolt which, as the bolt's head acts as the primary stop, determines the range of elevator travel. This was the bolt that came loose – the primary reason for it become so was that the bolt, though it had a locking 'star' washer in the system, wasn't positively locked. **Photo: Alpi Aviation**

Wire Lock Pair / Wire Lock Alpi

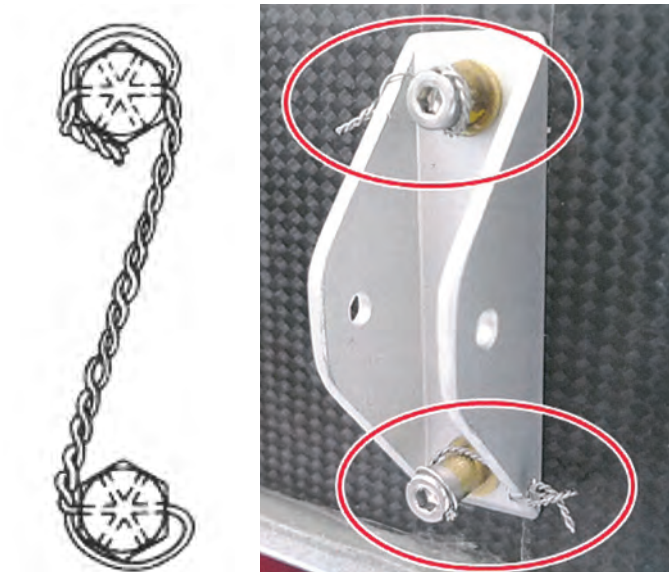

Above LAA Engineering has issued an Airworthiness Information Leaflet for each of the Alpi types in service, requiring the hinge attachment cap-bolts to be positively locked in accordance with normal aircraft design practice. The best method for this is wire-locking the heads and the sketch on the left shows the normally accepted way of doing this when two operate as a team. The picture on the right shows an alternate method; this picture also shows well the up and down control limit bushes. **Photos: AC 43.13.1B / Alpi**

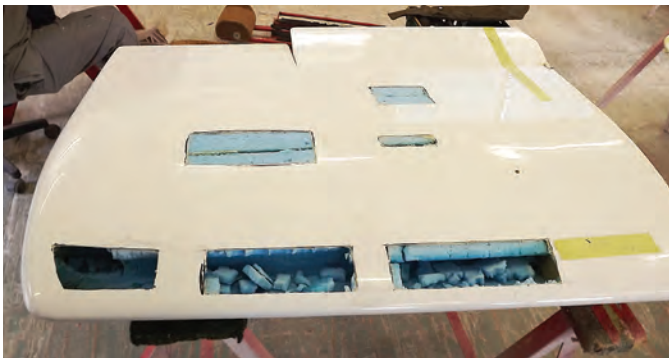

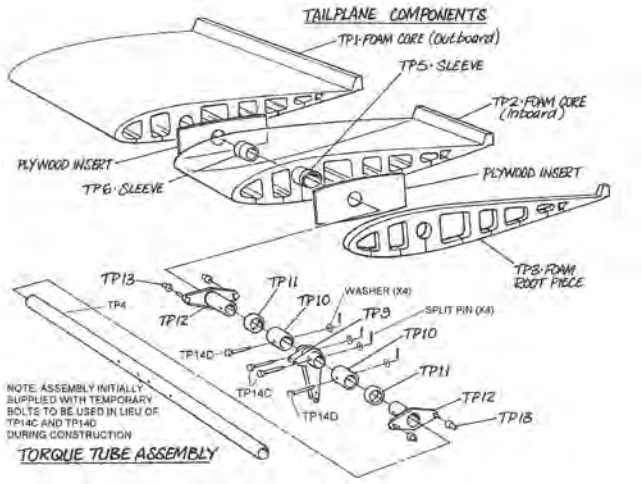

Top and above Back at the beginning of this year, I featured a picture showing what looked like either 'time-related' degradation or chemical, possibly fume damage, of the foam that forms the core of a Europa tailplane. There are a number of sport aircraft designs that employ this 'fibreglass over a foam core' construction method, so you can see why we might be worried by the picture above left.
I wrote at the time: *The picture above shows one half of a Europa all-moving tailplane which 'didn't feel quite right' to the engineer during an inspection. It's pretty drastic when it's thought necessary to cut into a structure to see whether all's well within. In this case, for reasons yet to be established, clearly all was not well – the foam core material has degraded and become soft and spongy*.

Well, after a 'behind the scenes' investigation led by LAA Inspector Alan Thorne, Europa, Rutan Varieze/Long-Ez and a variety of other types can breathe a sigh of relief – the degradation damage found on this tailplane was almost certainly caused by mechanical means. The sketch on the right shows the build-up of the Europa tailplane and, as you can see, there is quite a bit of air space inside the tailplane and, unless there's some kind of ventilation, in some circumstances this air can become trapped inside the structure. Naturally, as the aircraft climbs, the outside pressure will drop and, as the pressure inside the tailplane's cavities remains the same, there will be a force trying to expand the tailplane.This tailplane was found not to have had any ventilation holes incorporated when built. Photos: **Bob McLean / Europa Aircraft Ltd.**

I've had the great pleasure to fly each of the three models of Alpi Pioneer and I have to say that I enjoyed every minute of the experiences. In terms of actual numbers, Pioneer aircraft don't quite count as a big hitter but, with 62 examples on our fleet in, Alpi's products have nevertheless made their mark. The Alpi types have a pretty good track record, though it has to be said that, early in the aircraft's career with the LAA, we did suffer an uncomfortable amount of undercarriage failures on the retractable models, mostly nose-undercarriages. As with all failures, there are almost always a suit of drivers. Foremost, at least in engineering terms, the result of Alpi's use of a very lightweight and simple design of retractable undercarriage in what started out as a microlight aircraft. This includes some inevitable design compromises compared to systems found in bigger aircraft, requiring increased vigilance to keep them working reliably. Foremost, in non-engineering terms, must be the role of the LAA member-owner, and it has to be said that in the lengthy list of undercarriage failures affecting this type, lack of preventative maintenance and poor rigging feature quite large – but that's a tale for another day.

An incident earlier this year, where a pilot flying his Pioneer 300 nearly lost elevator control, is another case in point where the aeroplane's lightweight design features merit more than usually in-depth maintenance and inspection practices.

In terms of design engineering, the control surfaces' hinges are bolted to the trailing edge of the wing, and the leading edge of the control surface respectively, and both these items are, effectively, sealed units providing no access to fit conventional stiffnuts. To solve this conundrum, the designer drew-up an aluminium back-plate and inserted within it the respective number of aluminium rivnuts – these are hollow, threaded devices that can be inserted into a hole, rather like a pop rivet and, using a specialist tool, squeezed up rather like said pop rivet.

Rivnuts, which are normally designed to attach lightweight items – they're often found attaching side-wall upholstery – are notoriously fickle devices. Normally the bolts or screws they secure are made of steel – and steel and aluminium equal a corrosion potential. When corrosion happens, the bolt will bind in the rivnut and, more often than not, when you try to undo a corroded bolt the rivnut will start to spin. Though, as all airframe fitters will tell you, a bit of a pain, when this happens to an upholstery screw it isn't terminal – when this device spins inside a non-accessible wing… well, you get the picture.

One other point, technically the most important here, is that a rivnut isn't a locking nut. Because of this, Alpi call up star washers to be fitted between the cap-bolt head and the hinge structure. The problem here is that much of the Pioneer aircraft is wood, and wood grows and shrinks according to the prevailing environmental conditions. As we now know, when the wood shrinks the star washers can become loose, leaving the cap-bolt free to turn.

After the inflight control loss issue, we wrote to all current owners ▶

of Alpi Pioneers letting them know what had happened, and to say that before further flight, they needed to check the attachments on their aircraft. And, as is usual, we asked for feedback. It turned out that loosening control hinge attachments had occurred a number of times in the Pioneer fleet – this came as quite a surprise to us here at LAA HQ and we were disappointed that no-one had let us know that this had happened.

We know that, on the incident flight involving an elevator control restriction, that this unwinding of the stop bolt must have occurred quite quickly, probably over the course of one or two flights, perhaps a couple of hours. Of course, this isn't an acceptable situation either in the short and long term, after all we don't ever want to lose an aircraft through critical bolts coming undone.

Now, to add to this control hinge bolts issue, Alpi themselves having been confronted with an aircraft with very badly corroded attachment cap-bolts back in 2016, issued a notice giving these bolts an in-service maximum life of 500 hours. More recently they issued another bulletin calling for wire-locking of the hinge bolts acting as stops. Faced with these twin problems, in early November LAA Engineering issued an AIL mandating an inspection of all hinge bolts, and wire locking.

Pioneer owners have reported having problems in drilling the heads of the bolts for wire locking, but fortunately, Paul Stansfield, the co-owner of the Alpi UK dealership, Cavendish Aviation, is putting together a kit of pre-drilled cap-bolts so that owners, along with their inspectors, can change the bolts and, in the process, check these connections thoroughly.

In dealing with this matter, we've stressed the importance of these critical attachments being checked regularly, and with this in mind the Airworthiness Leaflet requires that until the bolts have been wire locked, a check of these bolts is carried out before the first flight of every day. At the moment, wire locking is our preferred option but as always, we'd be happy to consider an alternative means of providing positive locking. We've also highlighted the need for care in removing the bolts for inspection because of the risk of the rivnuts being damaged, particularly if the bolts are corroded, and the difficulty that would be faced in trying to replace the rivnuts.

Initially our AIL required these bolts to be removed and checked every three years, this time-based rather than hours-based interval being more appropriate to a component suffering from corrosion. Subsequently, after much welcome input from owners and inspectors, and taking account of the fact that these bolts will all be changed with new pre-drilled cap-bolts, we've extended this check to six years and to include the option of carrying out the checks on a random sample basis rather than necessarily having to remove each one of the sixty or so bolts at each six-yearly inspection.

So, as the waft of Christmas cake, lovely as it is, pervades the atmosphere, may I wish you and yours the very best of Christmases and, naturally, a great 2020. Fair Winds. ■

LAA engineering charges

LAA Project Registration	
Kit Built Aircraft	£300
Plans Built Aircraft	£50
Issue of a Permit to Test Fly	
Non-LAA approved design only	£40
Initial Permit issue	
Up to 450kg	£450
451-999kg	£550
1,000kg and above	£650
Permit Renewal (can now be paid online via LAA Shop)	
Up to 450kg	£155
451-999kg	£200
1,000kg and above	£230
Factory-built gyroplanes (all weights)	£250
Note: if the last Renewal wasn't administered by the LAA an extra fee of £125 applies	
Modification application	
Prototype modification	minimum £60
Repeat modification	minimum £30
Transfer	
(from C of A to Permit or CAA Permit to LAA Permit)	
Up to 450kg	£150
451 to 999kg	£250
1,000kg and above	£350
Four-seat aircraft	
Manufacturer's/agent's type acceptance fee	£2,000
Project registration royalty	£50
Category change	
Group A to microlight	£135
Microlight to Group A	£135
Change of G-Registration fee	
Issue of Permit documents following G-Reg change	£45
Replacement Documents	
Lost, stolen etc (fee is per document)	£20
Latest SPARS – No 17 April 2018	

PLEASE NOTE: When you're submitting documents using an A4-sized envelope, a First Class stamp is insufficient postage.